5. 外形、结构：

5.1 外形图:

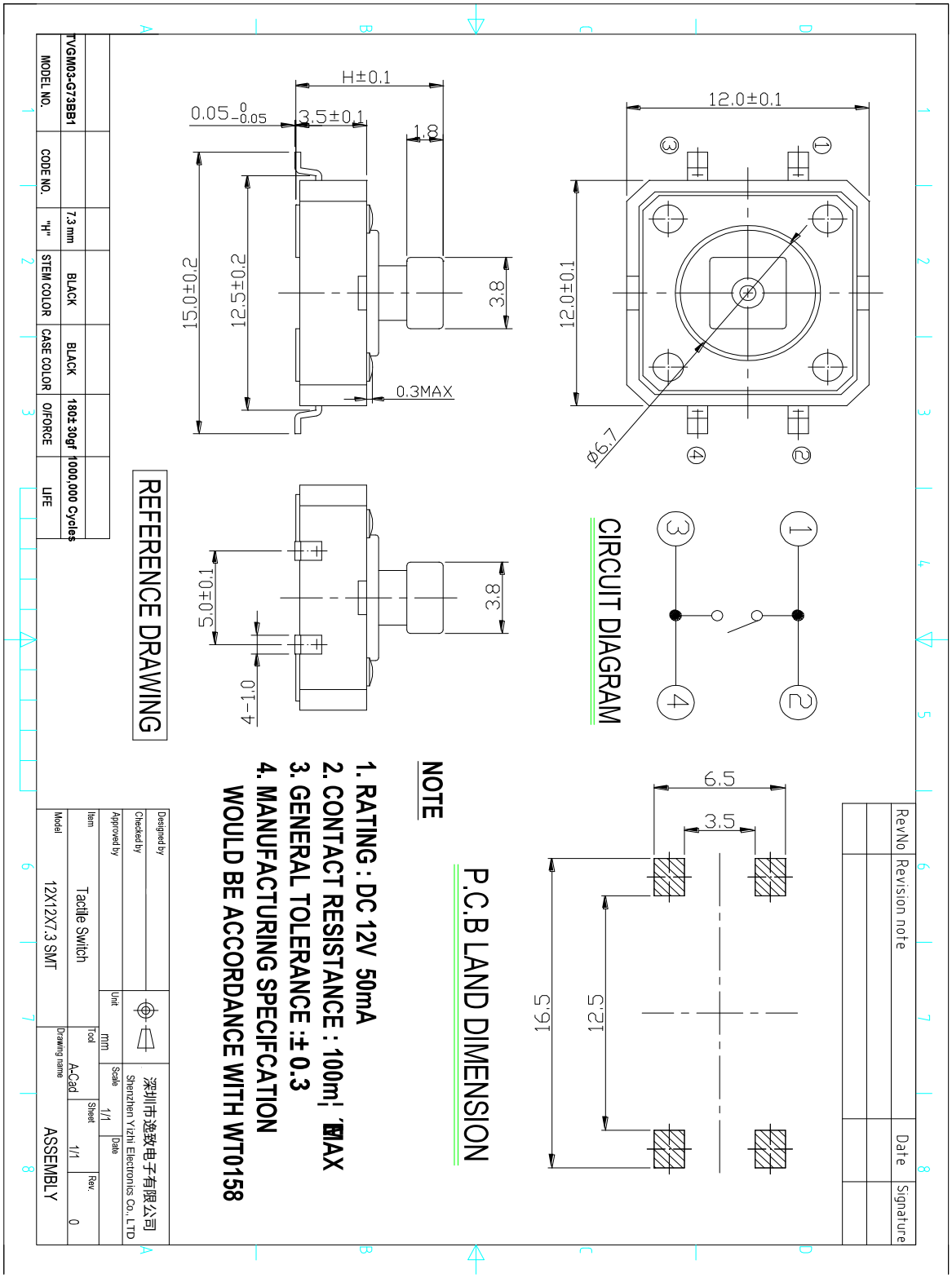
12.0±0.1
12.0±0.1
Ø6.7
H±0.1
0.05 0 -0.05
3.5±0.1
1.8
15.0±0.2
12.5±0.2
3.8
0.3MAX
5.0±0.1
1.0
3.8
CIRCUIT DIAGRAM
REFERENCE DRAWING
P.C.B LAND DIMENSION
6.5
3.5
19.5
12.5
NOTE
1. RATING : DC 12V 50mA
2. CONTACT RESISTANCE : 100mΩ MAX
3. GENERAL TOLERANCE :± 0.3
4. MANUFACTURING SPECIFCATION WOULD BE ACCORDANCE WITH WT0158
MODEL NO. TVGM03-G73BB1
CODE NO.
"H" 7.3 mm
STEM COLOR BLACK
CASE COLOR BLACK
O/FORCE 180± 30gf
LIFE 1000,000 Cycles
RevNo
Revision note
Date
Signature
Designed by
Checked by
Approved by
Item Tactile Switch
Model 12X12X7.3 SMT
Unit mm
Tool A-Cad
Drawing name ASSEMBLY
Scale 1/1
Sheet 1/1
Rev. 0
深圳市逸致电子有限公司
Shenzhen Yizhi Electronics Co., LTD