REFERENCE DRAWING

REV.	ECN.NO.	MODIFY.CONTENT	DATE
X1	1812****	NEW RELEASE	12/25/18

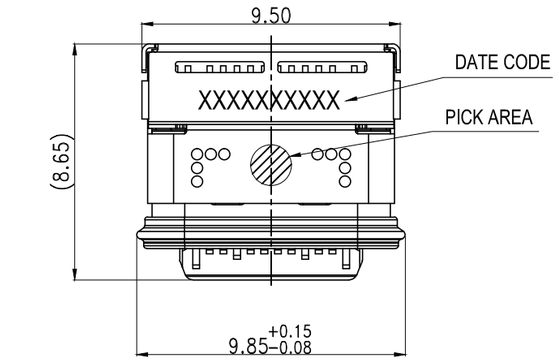

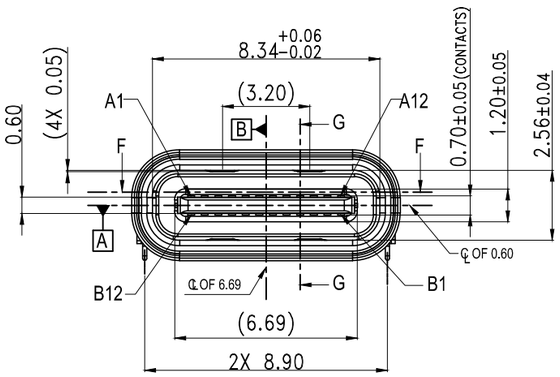

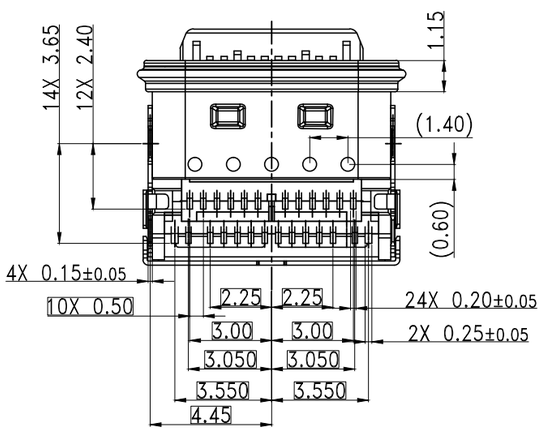

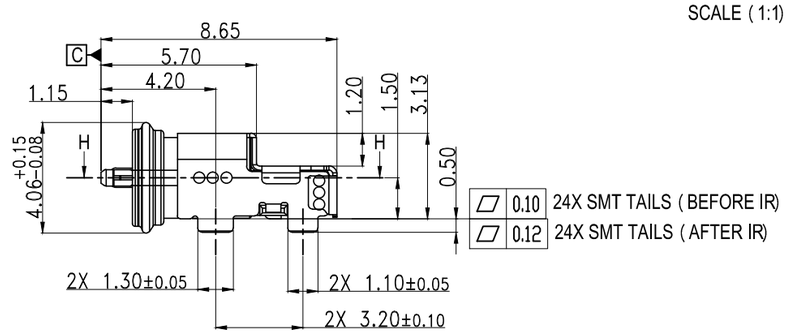

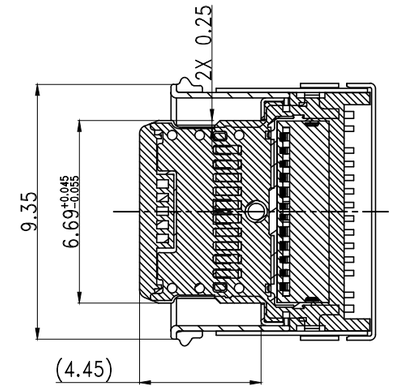

SECTION H-H
SCALE (1:1)

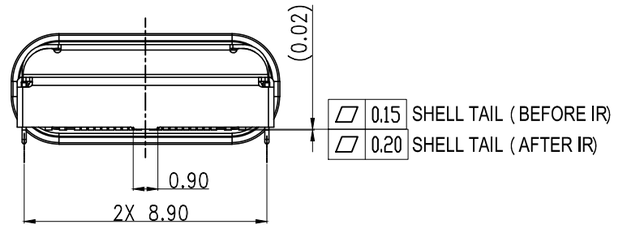

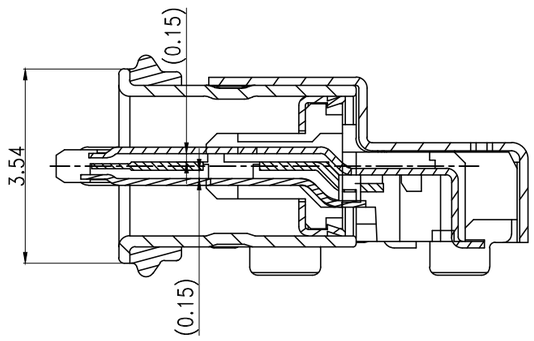

SECTION G-G
SCALE (2:1)

Pin No	Signal Name	Mating Sequence	Pin No	Signal Name	Mating Sequence
A1	GND	First	B12	GND	First
A2	TX1+	Second	B11	RX1+	Second
A3	TX1−	Second	B10	RX1−	Second
A4	VBUS	First	B9	VBUS	First
A5	CC1	Second	B8	SBU2	Second
A6	D+	Second	B7	D−	Second
A7	D−	Second	B6	D+	Second
A8	SBU1	Second	B5	CC2	Second
A9	VBUS	First	B4	VBUS	First
A10	RX2−	Second	B3	TX2−	Second
A11	RX2+	Second	B2	TX2+	Second
A12	GND	First	B1	GND	First
SHELL		GND	SHELL		GND

NOTES:
1.MATERIAL :SEE TABLE "A"
2.WATERPROOF : IPX4
3.ELECTRICAL CHARACTERISTICS
LOW LEVEL CONTACT RESISTANCE: 40 MΩ Max
INSULATION RESISTANCE:100MΩ MIN
DIELECTRIC WITHSTANDING VOLTAGE:100 VAC:
CONTACT CURRENT RATING:5A Max
4.MECHANICAL CHARACTERISTICS
INSERTION FORCE: 5~20N
EXTRACTION FORCE: 8~20N
AFTER DURABILITY EXTRACTION FORCE: 6~20N
5.DURABILITY: 10000 CYCLES
6.PACKAGING TYPE: CARRIER TAPE.
7.MATERIAL SHOULD BE FULFILLED AMPHENOL SPEC# SSN002
AND CUSTOMER REQUIREMENTS,FOR HALOGEN FREE PRODUCTS,
ALSO NEED TO MEET SSN004

GENERAL	TOLERANCE	FILE.NO.	C12401936	PART.NO.	124019362112A	DRAWN	MICHAEL.QIN	MATERIAL		SCALE	1:1
X.±0.50	x.°± 5°	REV.	X1	TITLE	USB TYPE C CONNECTOR TOP MOUNT	CHECKED	WEISON.LU	DATE	12−25−2018	UNIT	MM
.X±0.38	.x°± 2°	SIZE									
.XX±0.20	.xx± 1°	A4		SHEET	1 OF 2	APPROVED	TOM	Amphenol Shouhmin Industry			

REFERENCE DRAWING

REV.	ECN.NO.	MODIFY.CONTENT	DATE
SEE PAGE 1			

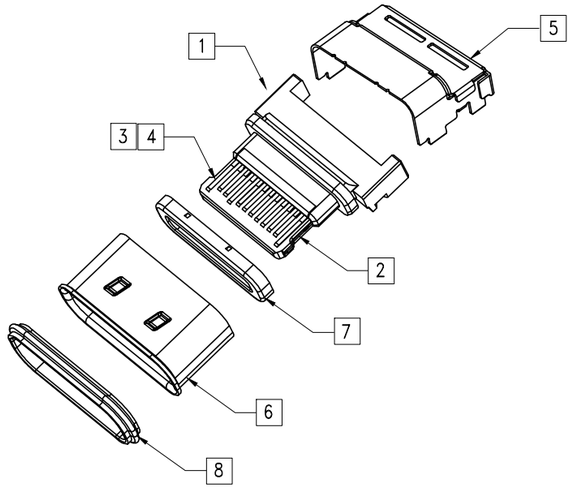

Explode View

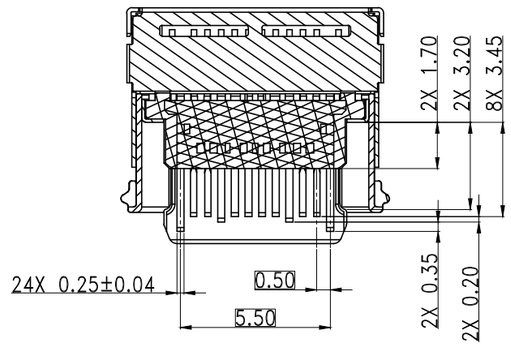

SECTION F-F
SCALE (1:1)

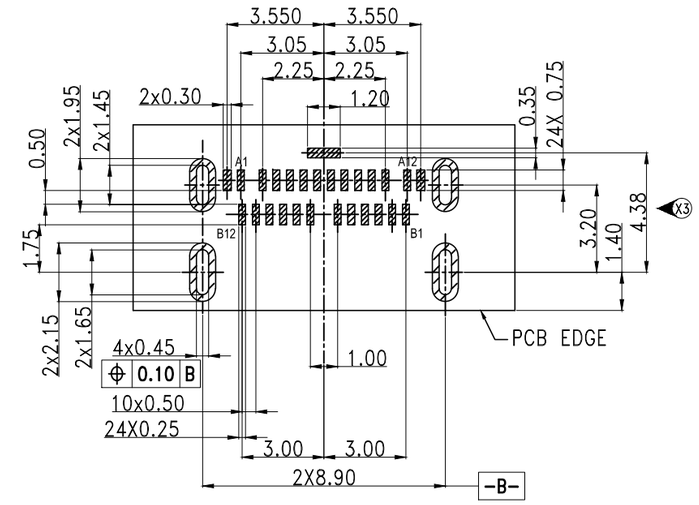

RECOMMENDED PCB LAYOUT
(TOLERANCE=±0.05)

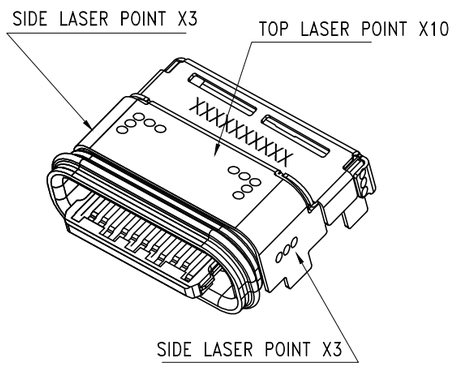

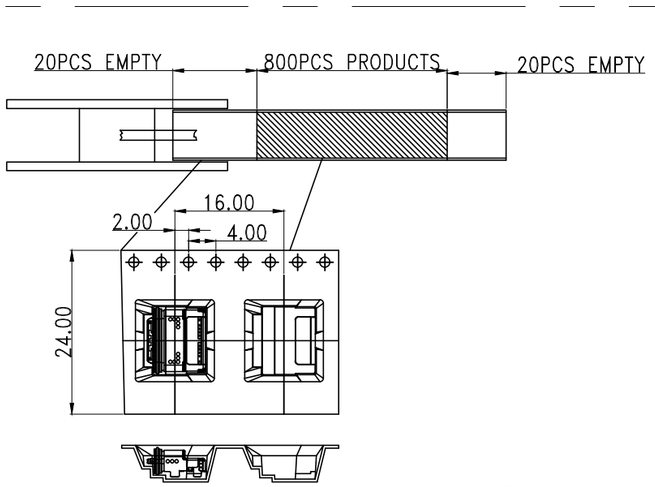

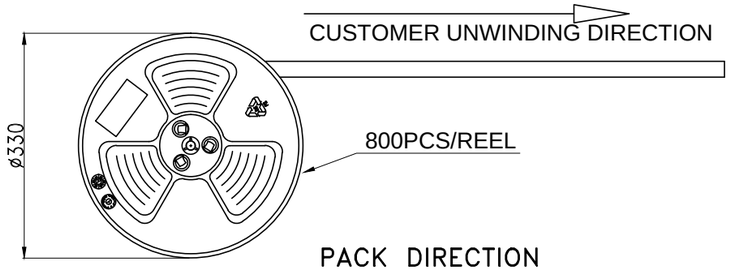

PACK DIRECTION

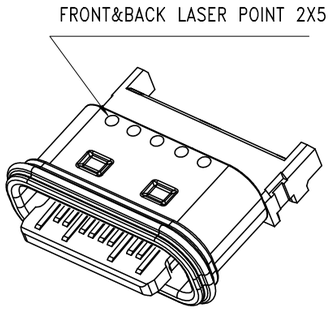

TABLE "A"

ITEM	DESCRIPTION	Q'TY	MATERIAL	FINISH
8	LIM	1	CHN-LIMS-60-A/B	BLACK
7	SMALL SHELL	1	SUS304-1/2H	NI PLATED OR CLEANING
6	MAIN SHELL	1	SUS304-1/2H	CLEANING
5	SUB-SHELL	1	SUS304-1/2H	NI PLATED
4	TOP TERMINAL	1	NKE012-EH	MATING AREA : Au30u"MIN SOLDER TAIL:Au 3~8u", 50~150u" NICKEL OVERALL.
3	BOTTOM TERMINAL	1	NKE012-EH	MATING AREA : Au30u"MIN SOLDER TAIL:Au 3~8u", 50~150u" NICKEL OVERALL.
2	MID PLATE	1	SUS301-H	NI PLATED
1	MAIN HOUSING	1	PA46 HFX31S	BLACK

BILL OF MATERIAL

GENERAL	TOLERANCE	FILE.NO.	C12401936	PART.NO.	124019362112A	DRAWN	MICHAEL.QIN	MATERIAL		SCALE	1:1
X.±0.50	x.°± 5°	REV.	X1	TITLE	USB TYPE C CONNECTOR TOP MOUNT	CHECKED	WEISON.LU	DATE	12-25-2018	UNIT	MM
.X±0.38	.x°± 2°	SIZE									
.XX±0.20	.xx± 1°	A4		SHEET	2 OF 2	APPROVED	TOM	Amphenol Shouhmin Industry			