THIS DRAWING IS UNPUBLISHED. RELEASED FOR PUBLICATION 20
© COPYRIGHT 20 BY - ALL RIGHTS RESERVED.

REVISIONS

P	LTR	DESCRIPTION	DATE	DWN	APVD
	A	INITIAL RELEASE	02JUN2015	DL	CW
	A1	ECR-17-017115	29NOV2017	CH	CW
	B	ECR-21-109004	16AUG2021	WQR	CW

NOTES:
1. TECHNICAL CHARACTERISTICS:
   BODY MATERIAL: DIE CAST ALUMINIUM ALLOY
   SURFACE TREATMENT: POWDER COATED, GREY
   DEGREE OF PROTECTION: IP65 (MATED)

注释：
1. 技术参数：
   主体材料： 铝合金
   表面处理： 灰色粉末喷涂
   防护等级： IP65(配合)

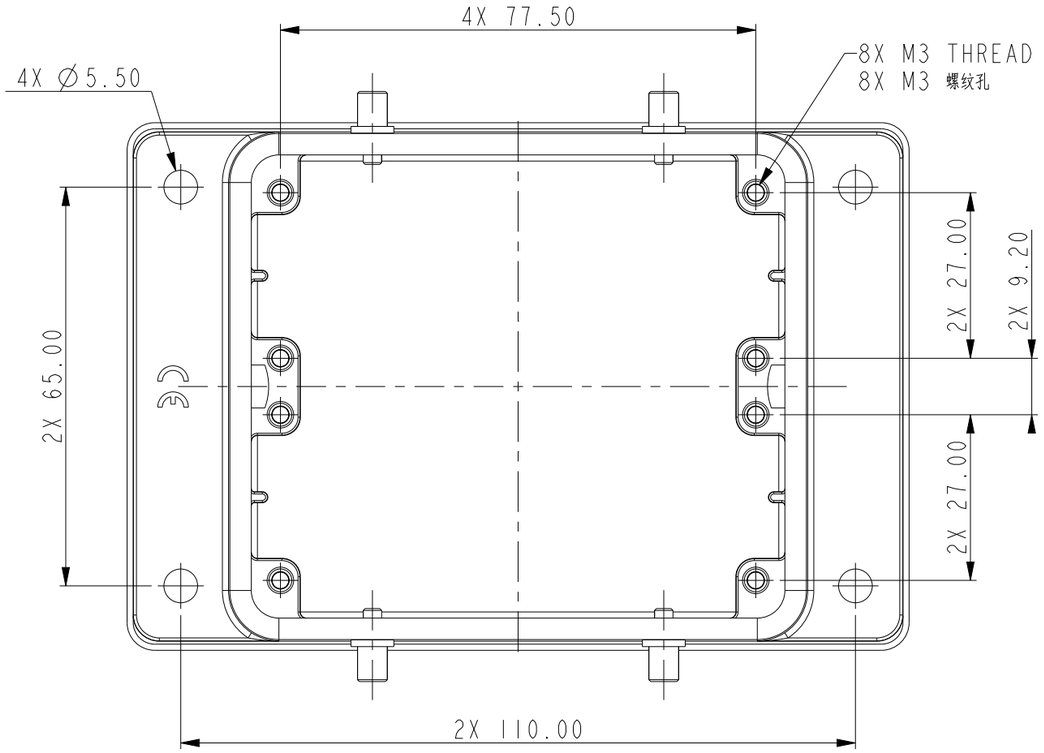

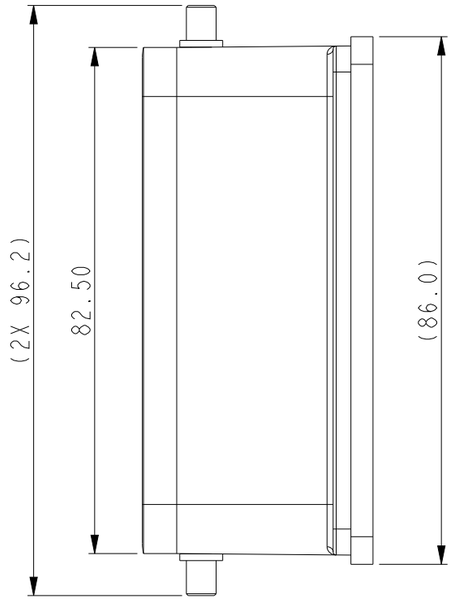

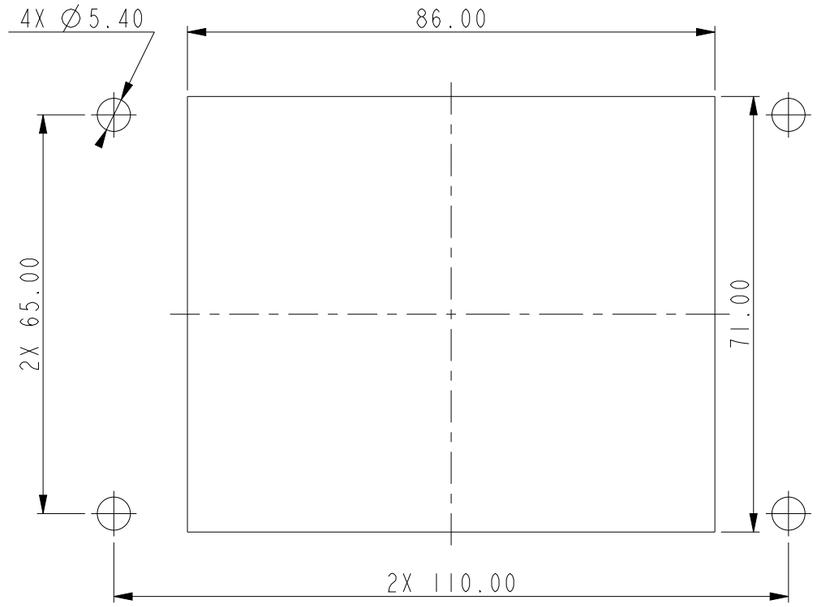

开孔安装示意图
PANNEL CUT OUT

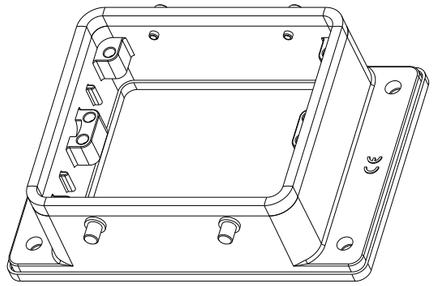

SCALE 1:2

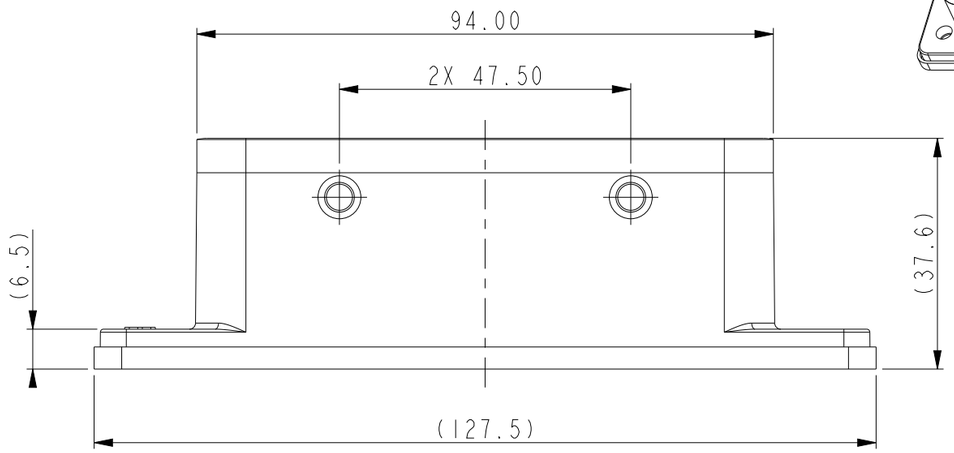

PART NUMBER 料号	PART DESCRIPTION 描述	
T1420320000-000	H32B-AG-BO	H32B HOUSING, BULKHEAD MOUNTED, 4 EAR, POWDER COATED, GREY H32B下壳，开孔安装，4耳，灰色粉末喷涂

THIS DRAWING IS A CONTROLLED DOCUMENT.

DIMENSIONS: mm

TOLERANCES UNLESS OTHERWISE SPECIFIED:
0 PLC ±-
1 PLC ±-
2 PLC ±-
3 PLC ±-
4 PLC ±-
ANGLES ±-

MATERIAL - -
FINISH - -

DWN DAVID.LI 02JUN2015
CHK CHRIS.WANG 02JUN2015
APVD XIANG.XU 02JUN2015
PRODUCT SPEC 108-137013
APPLICATION SPEC 114-137013
WEIGHT -

TE Connectivity

NAME H32B-AG-BO

SIZE	CAGE CODE	DRAWING NO	RESTRICTED TO
A3	-	C-T1420320000000	-

Customer Drawing | SCALE 1:1 | SHEET 1 OF 1 | REV B

1470-19 (3/13)